TR-WM06-I-IN Housing Wall Mount Bracket

Specifications

Bracket	TR-WM06-I-IN
Application Environment	Indoor/Outdoor, wall installation for box camera housing
Application Range	28/29 Series Housing
Dimensions(L × W × H)	140mm*88mm*374mm (5.5”x3.5”x14.7”)
Weight	0.8kg(1.76lb)
Material	Aluminum alloy
Adjustable Range	Horizontal: 360° ; Vertical: -45° ~0°

Dimensions

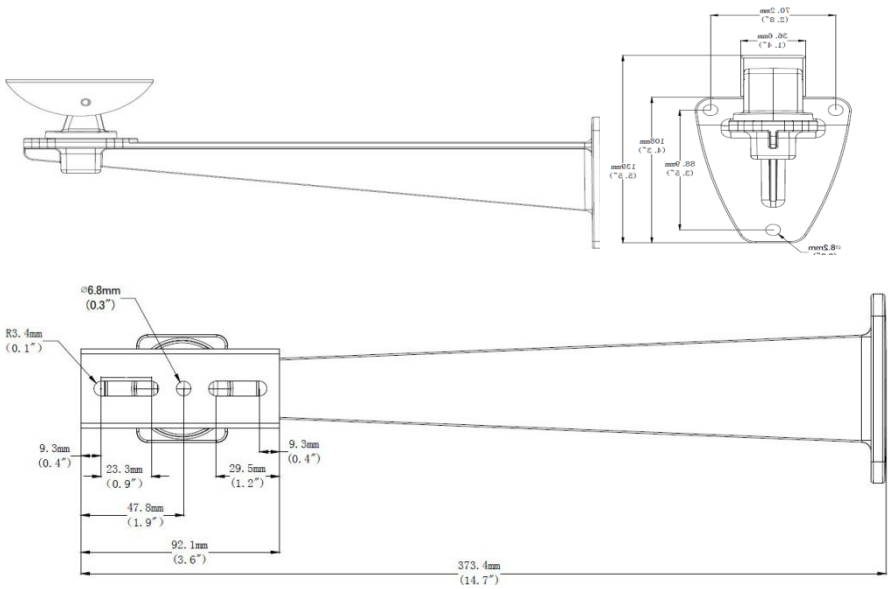

Ordering Information

Bracket	Remarks
TR-WM06-I-IN	housing wall mount bracket